CAN Series Products

Intelligent CAN to Ethernet Gateway

I-7540D

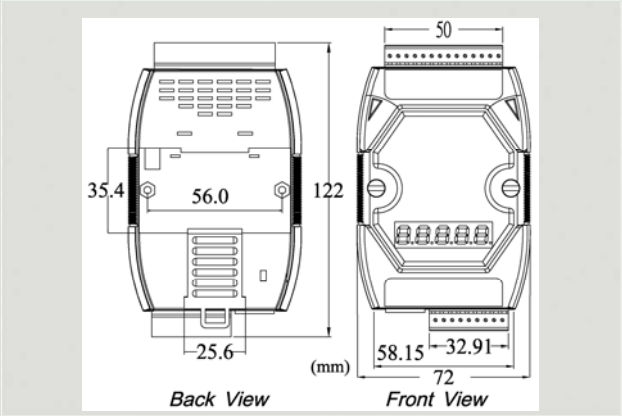

Dimensions

The I-7540D from ICP DAS is a solution that enables CAN networks to be coupled together over the Internet/Ethernet, whereby remote monitoring and control is possible. The I-7540D controls networked communication and makes a transparent CAN-based application interface available to the user. The device supports a transparent, protocol-independent transfer of the CAN messages and virtual COM technology, thus allowing its implementation into a wide range of possible applications.

Features

- 80186-80 Embedded CPU, or compatible
- 10/100 Base-TX Ethernet Controller
- Message transmitted by using TCP/IP protocol
- COM driver support interrupt & 1K QUEUE Input & Output buffer
- Support one RS-232 port, one RS-485 port and one CAN port
- 2500Vrms photo-isolation protection on CAN side.
- Jumper for 120Ω terminator resistor for CAN channel
- Phillips 82C250 CAN Transceiver
- Support both CAN specification 2.0A and 2.0B.
- Max transmission speed up to 1M bps for CAN and 115.2K bps for RS-232 & RS-485
- Max transmission distance of CAN over 1000m (follow CAN specification)
- 7-segment LED display.
- Software configurable CAN and RS-232 communication parameters
- Firmware updated from COM1 or Ethernet port
- Support Web Configuration
- Support max 25 Ethernet client connections
- Support Virtual COM technology

Utility Features

- IP、Gateway and Mask configuration
- CAN bus Baud rate configuration
- CAN BTR0 and BTR1 configuration
- CAN acceptance filter configuration
- CAN 2.0A or 2.0B specific selection
- Error code response selection
- Easy tool to transmit / receive CAN messages

CAN Monitor & Data log Tools

- Show CAN messages by hex or decimal format
- CAN messages with time stamp
- Easy-to-use data logger for the diagnosis of CAN Networks and recording of process data.
- Send the defined CAN messages manually or cyclically

Wire Assignments

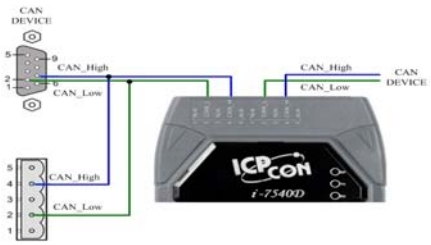

Hardware Specifications

CPU	
CPU	80186, 80MHz or compatible
SRAM	512K Bytes
Flash	512K Bytes
EEPROM	16K Bytes
NVRAM	31 Bytes (battery backup, data valid up to 10 year)
RTC (Real Time Clock)	Yes
64-bit Hardware Serial Number	Yes
Built-in Watchdog Timer	Yes
Communication Interface	
COM1	RS-232 (TXD, RXD, RTS, CTS, GND)
COM2	RS-485 (D2+, D2-)
CAN	One CAN port with two CAN bus connector interfaces (CAN_H, CAN_L)
Ethernet Port	10/100Base-TX Ethernet Controller (Auto-negotiating, Auto_MDIX, LED indicator)
COM Port Formats	
Data bit	7, 8
Parity	Even, Odd, None
Stop bit	1
Baud-rate	115.2Kbps max.
CAN Port Formats	
CAN Controller	Phillips SJA1000T CAN Controller
CAN Transceiver	Phillips 82C250 CAN Transceiver
Isolated	2500Vrms on CAN side
Baud-rate	1Mbps max.
Dimensions	
I-7540D	122mm x 72mm x 33 mm (H x W x D)
Environment	
Operating Temp.	-25°C to +75°C
Storage Temp.	-40°C to +80°C
Power	
Protection	Power reverse polarity protection
Frame Ground for ESD Protection	Yes
Required Supply Voltage	+10 to +30VDC (non-regulated)
Power consumption	2.5W

Applications

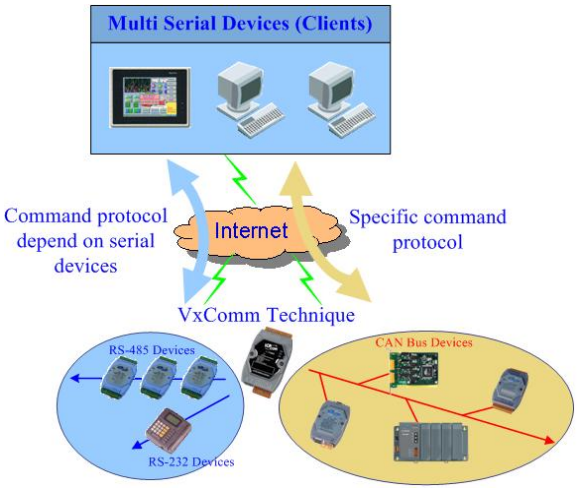

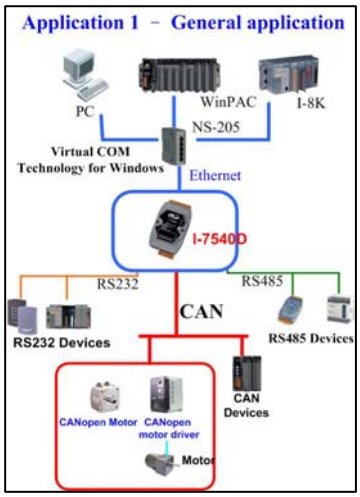

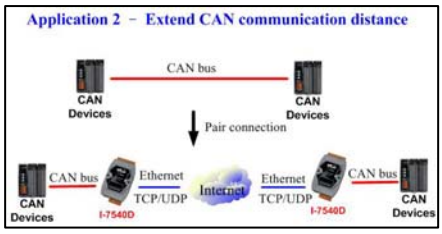

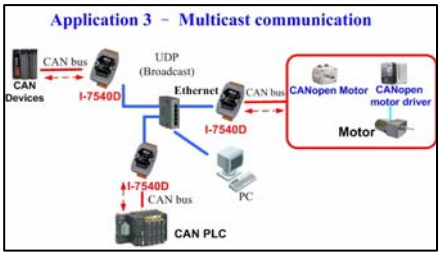

Ordering Information

I-7540D	Internet communication controller with one CAN bus, one RS-232, one RS-485 and one Ethernet